SH5.0/6.0RS

Residential Hybrid Single Phase Inverter



FLEXIBLE APPLICATION

- 80 V - 460 V wide battery voltage range
- Ideal for both retrofitting and new installations
- Built-in smart PID Zero function

ENERGY INDEPENDENCE

- Seamless transition to backup mode, for protection against power outages
- Fast Charging or discharging, enabling higher self-consumption results
- Built-in EMS with advanced customization

USER FRIENDLY SETUP

- Plug and play installation
- iSolarCloud monitoring available on App and Web
- Lightweight and compact, optimized for heat-dissipation

SMART MANAGEMENT

- Real time data (10 seconds refresh sample)
- 24/7 live online monitoring and with integrated display
- Online IV curve scan and diagnosis

CIRCUIT DIAGRAM

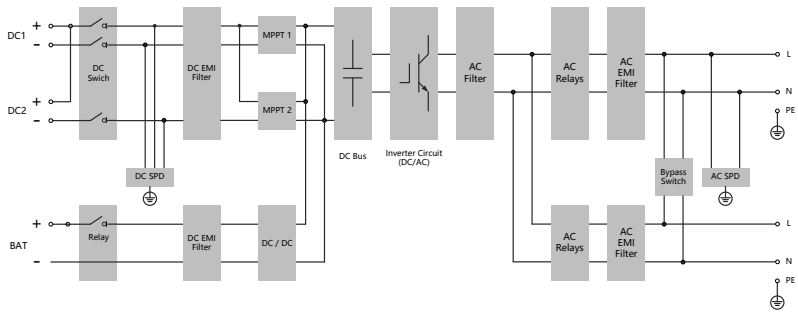

EFFICIENCY CURVE (SH6.0RS)

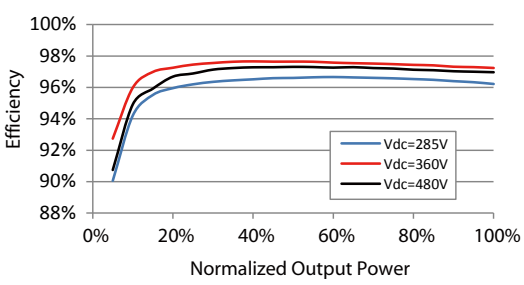

© 2024 Sungrow Power Supply Co., Ltd. All rights reserved. Subject to change without notice. Version 14

SUNGROW
Clean power for all

Type designation	SH5.0RS	SH6.0RS
Input (DC)		
Recommended max. PV input power	12000 Wp	13000 Wp
Max. PV input voltage *	600 V	
Min. PV input voltage / Startup input voltage	40 V / 50 V	
Rated PV input voltage	360 V	
MPPT operating voltage range **	40 V – 560 V	
No. of independent MPP trackers	2	
No. of PV strings per MPPT	1 / 1	
Max. PV input current	32 A (16 A / 16 A)	
Max. DC short-circuit current	40 A (20 A / 20 A)	
Max. current for input connector	20 A	
Battery data		
Battery type	Li-ion battery	
Battery voltage range	80 V - 460 V	
Max. charge *** / discharge current ***	30 A / 30 A	
Max. charge / discharge power	6600 W	
Input / Output (AC)		
Max. AC power from grid	12000 VA	13000 VA
Rated AC output power	4999 W	6000 W
Max. AC output apparent power	4999 VA	6000 VA
Rated AC output apparent power	4999 VA	6000 VA
Rated AC output current (at 230 V)	21.7 A	26.1 A
Max. AC output current	22.7 A	27.3 A
Rated AC voltage	230 V	
AC voltage range	154 V – 276 V	
Rated grid frequency	50 Hz / 60 Hz	
Grid frequency range	45 Hz – 55 Hz / 55 Hz – 65 Hz	
Harmonic (THD)	< 3 % (of rated power)	
Power factor at rated power / Adjustable power factor	> 0.99 at default value at rated power	
Feed-in phases / connection phases	1 / 1	
Backup data （ on-grid mode ）		
Max. output power for backup load ****	6000 W	
Max. output current for backup load *****	27.3 A	
Backup data （ off-grid mode ）		
Rated voltage	230V (± 2 %)	
Rated frequency	50 Hz / 60 Hz (± 0.2 %)	
THDV (@Linear load)	< 2 %	
Backup switch time	< 10 ms	
Rated output power	5000 W / 5000 VA	6000 W / 6000 VA
Peak output power	8400 VA，10 s	
Efficiency		
Max. efficiency / European efficiency	97.7 % / 97.3 %	
Protection & Function		
Grid monitoring	Yes	
DC reverse polarity protection	Yes	
AC short circuit protection	Yes	
Leakage current protection	Yes	
DC switch (solar)	Yes	
Surge protection	DC Type II / AC Type II	
PID Zero	Yes	
Battery input reverse polarity protection	Yes	
General data		
Topology (Solar / Battery)	Transformerless / Transformerless	
Degree of protection	IP65	
Dimensions (W * H * D)	490 mm * 340 mm * 170 mm	
Weight	18.5 kg	
Mounting method	Wall-mounting bracket	
Operating ambient temperature range	-25 ℃ – 60 ℃	
Allowable relative humidity range	0 % – 100 %	
Cooling method	Natural convection	
Max. operating altitude	4000 m	
Noise (typical)	< 45 dB (A)	
Display	LED digital display & LED indicator	
Communication	RS485 / Ethernet / WLAN / CAN	
DI / DO	DI * 4 / DO * 1 / DRM	
DC connection type	MC4 (PV, Max.6 mm²) / Evo2 Compatible (Battery, Max.6 mm²)	
AC connection type ******	Plug and Play (Grid Max.16 mm², Backup Max.6 mm²)	
Grid compliance	IEC/EN 62109-1, IEC/EN 62109-2, IEC/EN 62477-1, AS/NZS 4777.2:2020	
Country of manufacture	China	

* Input voltage exceeding the MPPT operating voltage range triggers inverter protection ** Please refer to the user manual for the full load MPPT voltage range *** Depending on the connected battery **** Please refer to the user manual and modify the settings based on actual load power ***** Calculated based on 220V grid voltage ****** AC Connector brand is Phoenix Contact and compatible brand. Country code needs to be set before grid connection

© 2024 Sungrow Power Supply Co., Ltd. All rights reserved. Subject to change without notice. Version 14

SH8.0 - 10RS

Residential Hybrid Single Phase Inverter



FLEXIBLE APPLICATION

- 200% DC/AC PV input 16A*4MPPTs
- Ideal for both new installation and retrofit scenario
- Built-in smart PID recovery function

SMART MANAGEMENT

- Real time data (10 seconds refresh sample)
- 24 / 7 live monitoring both online and with integrated display
- Online IV curve scan and diagnosis

ENERGY INDEPENDENCE

- Seamless transition to backup mode, for protection against power outages
- Fast Charging or discharging, enabling higher self-consumption results
- Built-in EMS with advanced customization

USER FRIENDLY

- Plug and play installation
- iSolarCloud monitoring available on App and Web
- Whole home backup available

© 2024 Sungrow Power Supply Co., Ltd. All rights reserved. Subject to change without notice. Version 3

SUNGROW
Clean power for all

Type designation	SH8.0RS	SH10RS
Input (DC)		
Recommended max. PV input power	16000 Wp	20000 Wp
Max. PV input voltage *	600 V	
Min. PV input voltage / Startup input voltage	40 V / 50 V	
Rated PV input voltage	360 V	
MPPT operating voltage range **	40 V – 560 V	
No. of independent MPP inputs	4	
No. of PV strings per MPPT	1 / 1 / 1 / 1	
Max. PV input current	64 A (16 A / 16 A / 16 A / 16 A)	
Max. DC short-circuit current	80 A (20 A / 20 A / 20 A / 20 A)	
Max. current for input connector	20 A	
Battery data		
Battery type	Li-ion battery	
Battery voltage range	80 V – 460 V	
Max. charge / discharge current	50 A *** / 50 A ***	
Max. charge / discharge power	10000 W / 10000 W	
Input and Output (AC)		
Max. AC power from grid	14500 VA	
Rated AC output power	8000 W	9999 W
Max. AC output apparent power	8000 VA	9999 VA
Max. AC output current	36.4 A	45.5 A
Rated AC voltage	1 / N / PE, 220 V / 230 V / 240V	
AC voltage range	154 V – 276 V	
Rated grid frequency	50 Hz / 60Hz	
Grid frequency range	45 Hz – 55 Hz / 55 Hz – 65 Hz	
Harmonic (THD)	< 3 % (at rated power)	
Power factor at rated power / Adjustable power factor	> 0.99 / 0.8 leading – 0.8 lagging	
Feed-in phases / connection phases	1 / 1-N-PE	
Backup data (on grid mode)		
Rated output power for backup load	14500 W	
Rated output current for backup load	63 A	
Backup data(off-grid mode)		
Rated voltage	1 / N / PE, 220 V / 230 V / 240 V (± 2 %)	
Rated grid frequency	50 Hz / 60 Hz (± 2 %)	
Output voltage harmonic (THD)	< 2 %	
Switch time to emergency mode	< 10 ms	
Rated output power	8000 W / 8000 VA	9999 W / 9999 VA
Peak output power	13680 VA, 10 s	
Efficiency		
Max. efficiency / European efficiency	97.4 % / 96.8 %	97.5 % / 97.1 %
Protection & Function		
Grid monitoring	Yes	
DC reverse polarity protection	Yes	
AC short - circuit protection	Yes	
Leakage current protection	Yes	
DC switch (solar)	Yes	
Surge protection	DC type II / AC type II	
PID Zero	Yes	
Battery input reverse polarity protection	Yes	
AFCI	Yes	
IV scan aand diagnosis	Yes	
General data		
Topology (solar / battery)	Transformerless / Transformerless	
Degree of protection	IP65	
Dimensions (W * H * D)	605 mm * 435 mm * 181 mm	
Weight	29 kg	
Mounting method	Wall-mounting bracket	

© 2024 Sungrow Power Supply Co., Ltd. All rights reserved. Subject to change without notice. Version 3

Type designation	SH8.0RS	SH10RS
Operating ambient temperature range	- 25 ℃ – 60 ℃	
Allowable relative humidity range (non-condensing)	0 % – 100 %	
Cooling method	Natural cooling	
Max. operating altitude	4000 m	
Noise (typical)	45 dB (A)	
Display	LED digtal display and LED indicator	
Communication	RS485, WLAN, Ethernet, CAN	
DI / DO	DI * 1 / DO * 2 / DRM	
DC connection type	MC4 (PV) / Plug and play connector (battery)	
AC connection type	Plug and play connector	
Grid compliance	IEC 62109-1:2010, IEC 62109-2, IEC 62477-1,IEC61000-6-1/-2/-3/-4, IEC62920 EN55011,CISPR 11,AS/NZS 4777.2:2020	
Country of manufacture	China	

* Input voltage exceeding the MPPT operating voltage range triggers inverter protection
** Please refer to the user manual for the full load MPPT voltage range
*** Depending on the connected battery

© 2024 Sungrow Power Supply Co., Ltd. All rights reserved. Subject to change without notice. Version 3

SH5.0/10RT

Residential Hybrid Three Phase Inverter



FLEXIBLE APPLICATION

- 150–600V wide battery voltage range
- Supports parallel connection with master-slave controlling
- Provides 100% power to unbalance loads in backup mode

ENERGY INDEPENDENCE

- Seamless transition to backup mode for protection against power outages
- Fast charging / discharging to meet the demand of higher consumption

SMART MANAGEMENT

- High self-consumption with optimised built-in EMS
- Free online monitoring to enhance energy management for end user, installer and retailer
- Remote firmware update and customisable settings

EASY INSTALLATION

- Unique push-in connectors for time-saving installation
- Touch free commissioning with smartphone
- Lightweight and compact

CIRCUIT DIAGRAM

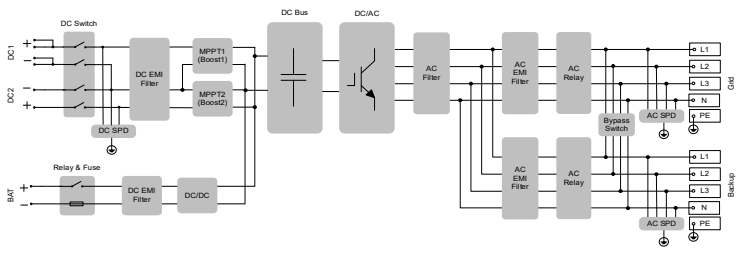

EFFICIENCY CURVE (SH5.0RT)

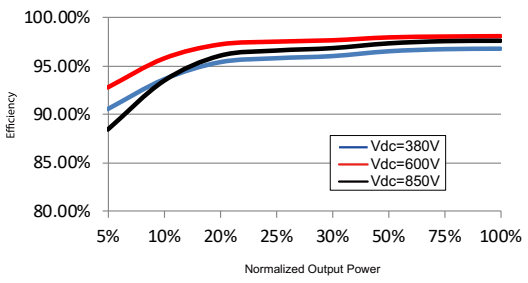

© 2022 Sungrow Power Supply Co., Ltd. All rights reserved. Subject to change without notice. Version 11

SUNGROW
Clean power for all

Type designation	SH5.0RT	SH10RT
Input (DC)		
Recommended max. PV input power	7500 W	15000 W
Max. PV input voltage	1000 V	
Min. PV input voltage / Startup input voltage	150 V / 180 V	200 V / 250 V
Rated PV input voltage	600 V	
MPP voltage range	150 V – 950 V	200 V - 950 V
MPP voltage range for rated power	210 V – 850 V	280 V - 850 V
No. of independent MPP inputs	2	
No. of PV strings per MPPT	1 / 1	1 / 2
Max. PV input current	25 A (12.5 A / 12.5 A)	37.5 A (12.5 A / 25 A)
Max. DC short-circuit current	36A (18A / 18A)	54A (18A / 36A)
Max. current for input connector	30 A	
Battery Data		
Battery type	Li-ion battery	
Battery voltage	150V - 600V	
Max charge / discharge current	30A * / 30A *	
Max charge / discharge power	7500 W / 6000 W	10600 W / 10600 W
Input and Output (AC)		
Max. AC input power	11600 W	14000 W
Max. AC power from grid	12500 VA	20600 VA
Rated AC output power	5000 W	10000 W
Max. AC output apparent power	5000 VA	10000 VA
Rated AC output apparent power	5000 VA	10000 VA
Rated AC ouput current	7.3 A	14.5 A
Max. AC output current	7.6 A	15.2 A
Rated AC voltage	3 / N / PE, 220 / 380 V; 230 / 400 V; 240 / 415 V	
AC voltage range	270 - 480 V	
Rated grid frequency	50 Hz	
Grid frequency range	45 - 55 Hz	
Harmonic (THD)	< 3 % (of rated power)	
Power factor at Rated power / Adjustable power factor	>0.99 / 0.8 leading to 0.8 lagging	
Feed-in phases / connection phases	3 / 3-N-PE	
Backup Data		
Rated voltage	3 / N / PE, 220 Vac / 230 Vac / 240 Vac	
Total hamonic factor output voltage (Linear load)	2 %	
Switch time to emergency mode	<20 ms	
Rated output power	5000 W / 5000 VA	10000 W / 10000 VA
Peak output power **	6000 W / 6000 VA, 5 min 10000 W / 10000 VA, 10 s	12000 W / 12000 VA, 5 min
Rated output current for backup load during on grid mode	3 x 18.5 A	
Efficiency		
Max. efficiency / European efficiency	98.0 % / 97.2 %	98.4 % / 97.9 %
PV to Bat to Grid efficiency	> 94 %	
Protection & Function		
Grid monitoring	Yes	
DC reverse polarity protection	Yes	
AC short-circuit protection	Yes	
Leakage current protection	Yes	
DC switch (solar)	Yes	
DC fuse (battery)	Yes	
Surge Protection	DC Type II / AC Type II	
PID recovery function	Yes	
Parallel operation on grid port / Max. No. of inverters	Master-slave mode / 5 (need same inverters type)	
Battery input reverse polarity protection	Yes	
General Data		
Topology (solar / battery)	Transformerless / Transformerless	
Degree of protection	IP65	
Dimensions (W x H x D)	460*540*170 mm	
Weight	27 kg	
Mounting method	Wall-mounting bracket	
Operating ambient temperature range	-25 ℃ to 60 ℃	
Allowable relative humidity range(Non-condensing)	0% - 100%	
Cooling method	Natural convection	
Max. operating altitude	4000 m	
Noise (Typical)	30 dB(A)	
Display	LED	
Communication	RS485, WLAN, Ethernet, CAN, 4 × DI, 1 × DO	
DC connection type	MC4 (PV) / Sunclix (Battery)	
AC connection type	Plug and play connector	
Compliance	IEC / EN 62109, IEC / EN 61000-6, EN 62477-1, IEC 61727, IEC 62116, IEC 61683, VDE-AR-N-4105, AS/NZS 4777.2:2020, EN50549-1, NRS 097-2-1, TOR Generator Type A	
Country of manufacture	China	

* Depending on the connected battery
** Can be reached only if PV and battery power is sufficient.

© 2022 Sungrow Power Supply Co., Ltd. All rights reserved. Subject to change without notice. Version 11

SH15/20/25T

Hybrid Three Phase Inverter



FULL BACKUP

- Built-in 63 A bypass for whole home backup
- 10 ms seamless switch
- Peak output up to 36500 VA (10 s) in backup mode (SH25T)

FLEXIBLE APPLICATION

- Support 100 % unbalance output in backup and on grid mode
- Max. 16 A DC input current per string
- 50 A fast charge / discharge current

FRIENDLY INSTALLATION

- Plug & Play installation
- Quiet operation for indoor or outdoor installation

SAFE AND DURABLE

- Support precise AFCI
- IP65/C5

© 2023 Sungrow Power Supply Co., Ltd. All rights reserved. Subject to change without notice. Version 2

SUNGROW
Clean power for all

Type designation	SH15T	SH20T	SH25T
Input (DC)			
Recommended max. PV input power	30000 Wp	40000 Wp	50000 Wp
Max. PV input voltage *	1000 V		
Min. PV input voltage / Startup input voltage	150 V / 180 V		
Rated PV input voltage	600 V		
MPPT operating voltage range **	150 V - 950 V		
No. of independent MPP trackers	3		
No. of PV strings per MPPT	2 / 2 / 1		
Max. PV input current	80 A (32 A / 32 A / 16 A)		
Max. DC short-circuit current	100 A (40 A / 40 A / 20 A)		
Max. current for input connector	30 A		
Battery data			
Battery type	Li-ion battery		
Battery voltage range	100 V - 700 V		
Max. charge / discharge current ***	50 A / 50 A		
Max. charge / discharge power	30000 W / 15000 W	30000 W / 20000 W	30000 W / 25000 W
Input and Output (AC)			
Max. AC power from grid ****	43000 VA		
Rated AC output power	15000 W	20000 W	25000 W
Max. AC output apparent power	15000 VA	20000 VA	25000 VA
Max. AC output current	22.8 A	30.4 A	37.9 A
Rated AC voltage	3 / N / PE, 220 V / 380 V ; 230 V / 400 V; 240 V / 415 V		
AC voltage range	270 V - 480 V		
Rated grid frequency	50 Hz / 60 Hz		
Grid frequency range	45 Hz - 55 Hz / 55 Hz - 65 Hz		
Harmonic (THD)	< 3 % (of rated power)		
Power factor at rated power / Adjustable power factor	> 0.99 / 0.8 leading to 0.8 lagging		
Feed-in phases/connection phases	3 / 3-N-PE		
Backup data (on grid mode)			
Max. output power for backup load ****	43000 W		
Max. output current for backup load	3 * 63 A		
Backup data (off-grid mode)			
Rated voltage	3 / N / PE, 220 / 380 V; 230 / 400 V; 240 / 415 V (± 2 %)		
Rated frequency	50 Hz / 60 Hz (± 0.2 %)		
THDV(@Linear load)	< 2 %		
Backup switch time	< 10 ms		
Rated output power	15000 W / 15000 VA	20000 W / 20000 VA	25000 W / 25000 VA
Peak output power *****	25500 W / 25500 VA , 10 s	32000 W / 32000 VA , 10s	36500 W / 36500 VA , 10 s
Efficiency			
Max. efficiency / European efficiency	98.1 % / 97.6 %		98.2 % / 97.8 %
Protection & Function			
Grid monitoring	Yes		
DC reverse polarity protection	Yes		
AC short-circuit protection	Yes		
Leakage current protection	Yes		
DC switch (solar)	Yes		
Surge protection	DC Type II / AC Type II		
PID zero	Yes		
Battery input reverse polarity protection	Yes		
General data			
Topology (solar / battery)	Transformerless / Transformerless		
Degree of protection	IP65		
Dimensions (W * H * D)	620 mm * 480 mm * 245 mm		
Weight	38 kg		40 kg
Mounting method	Wall-mounting bracket		
Operating ambient temperature range	-25 ℃ - 60 ℃		
Allowable relative humidity range(Non-condensing)	0 % - 100 %		
Cooling method	Natural convection		Fan cooling
Max. operating altitude	2000 m		
Noise(Typical)	35 dB (A)		50 dB (A)
Display	LED		
Communication	RS485, WLAN, Ethernet, CAN		
DI / DO	DI * 4 / DO * 2 / DRM0		
DC connection type	MC4 compatible connector (PV, Max.6 mm²)/Plug and play connector (battery, Max.10 mm²)		
AC connection type	Plug and play connector (Max.16 mm²)		
Compliance	IEC / EN 62109, IEC 61000-6, EN 62477-1, IEC 61727, IEC 62116, IEC 62920, EN 55011, CISPR 11, VDE-AR-N-4105, EN 50549-1, NRS 097, AS/NZS 4777.2:2020, TOR Type A, R25, CEI 0-21		
Country of manufacture	China		

* Input voltage exceeding the MPPT operating voltage range triggers inverter protection
** Please refer to the user manual for the full load MPPT voltage range
*** Depending on the connected battery
**** Please refer to the user manual and modify the settings based on actual load power
***** Can be reached only if PV and battery power is sufficient

© 2023 Sungrow Power Supply Co., Ltd. All rights reserved. Subject to change without notice. Version 2